MICRO SWITCH
a Honeywell Division
FED. MFG. CODE 91929

SWITCH - TOGGLE

CATALOG LISTING
1NT91 SERIES CHART 1

THIS DRAWING COVERS A PROPRIETARY ITEM AND IS THE PROPERTY OF MICRO SWITCH. A DIVISION OF HONEYWELL. THIS DRAWING IS NOT TO BE COPIED OR USED WITHOUT THE APPROVAL OF MICRO SWITCH

CATALOG LISTING	CIRCUIT MADE WITH TOGGLE LEVER IN (4)			ELECTRICAL DATA
	KEYWAY SIDE (1-2)	CENTER (1-2)	OPPOSITE KEYWAY (2-3)	
1NT91-1	ON	OFF	ON	L191 15A 125, 250, 277 VAC 1/2HP 125 VAC 1HP 250, 277 VAC 5A 125 VAC "L"
1NT91-2	OFF	NONE	ON	
1NT91-3	ON	NONE	ON	
(B)	NONE	OFF	ON	
(B)	NONE	ON	ON	
(B)	MOM OFF	NONE	ON	
1NT91-5	MOM ON	OFF	ON	L192 10A 125, 250, 277 VAC 1/4HP 125 VAC 1/2HP 250, 277 VAC 3A 125 VAC "L"
1NT91-6	MOM ON	NONE	OFF	
1NT91-7	MOM ON	OFF	MOM ON	
(B)	MOM ON	NONE	ON	
(B)	NONE	ON	MOM ON	
1NT91-61	MOM ON	OFF	NONE	

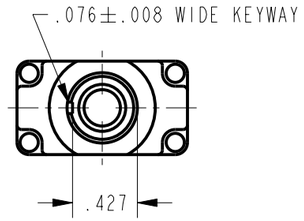

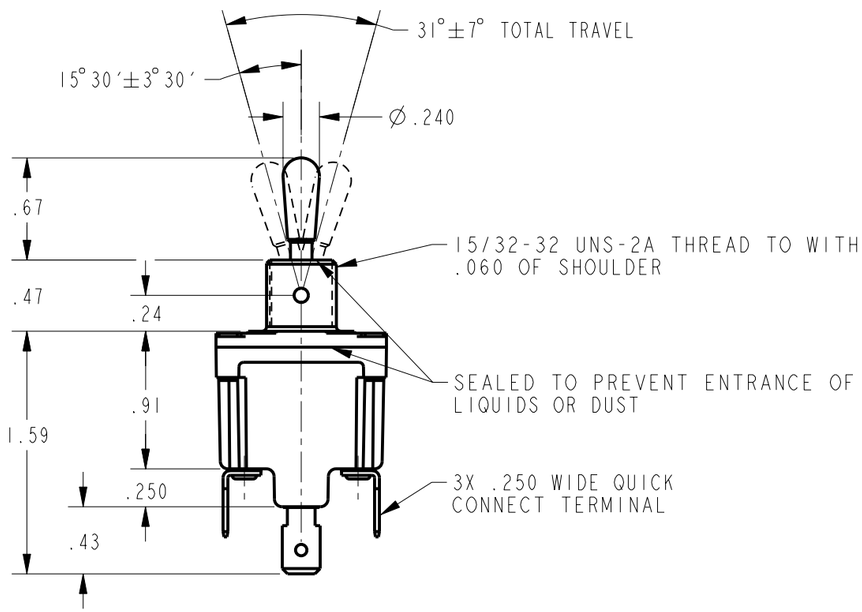

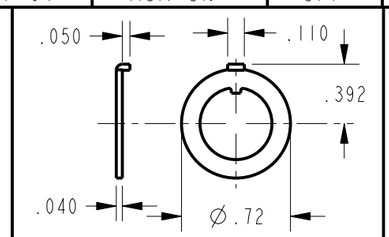

LOCKING RING (3)

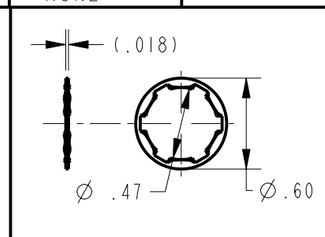

LOCKWASHER (3)

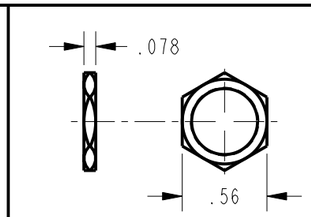

2X HEX NUT (3)

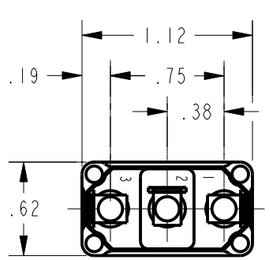

NOTES
1 - SWITCH WILL WITHSTAND TEMPERATURE OF 160°F CONTINUOUSLY AT FULL RATED LOAD
2 - MICRO SWITCH CAT. LIST. MARKED ON SIDE OF SWITCH
(3) FURNISHED UNASSEMBLED
(4) APPLIES ONLY TO "ON" AND "MOMENTARY ON" POSITIONS

THIRD ANGLE PROJECTION

SCALE FULL

DO NOT SCALE PRINT

UNLESS OTHERWISE SPECIFIED TOLERANCES ARE

ONE PLACE	(.0)	±.030
TWO PLACE	(.00)	±.015
THREE PLACE	(.000)	±.005
ANGLES		±

WEIGHT .07 LB APPROX

ANSI Y14.5M-1982 APPLIES

CATALOG LISTING 1NT91 SERIES CHART 1
PAGE 1 OF 1
RELEASE NO. PR-19402
REPLACES
ISSUE 6
CHECK
REVISIONS
A CO-94328 S A V 22 NOV 99
B 203388 G J W 11 JUL 01
C 207782 C S L 27 MAR 03
CHECK
22 NOV 99
SAV
CHECK
22 NOV 99
PTC/CAD 2D
DRAWN S A V 22 NOV 99